SHINDAIWA OWNER'S/OPERATOR'S MANUAL

AHS254
ARTICULATED HEDGE TRIMMER

WARNING!

Always wear eye and ear protection when operating this machine! To minimize the risk of injury to yourself and others, read this manual and familiarize yourself with its contents.

X7502872104
01/15

shindaiwa®

Introduction

The Shindaiwa H4 series of hand-held power equipment is designed and built to deliver superior performance and reliability without compromise to quality, comfort, safety or durability. Shindaiwa engines represent the leading edge of high-performance engine technology, delivering exceptionally high power with remarkably low displacement and weight. As an owner/operator, you'll soon discover for yourself why Shindaiwa is simply in a class by itself!

IMPORTANT!

The information contained in these instructions describes units available at the time of publication.

ECHO, Inc. reserves the right to make changes to products without prior notice, and without obligation to make alterations to units previously manufactured.

WARNING!

The engine exhaust from this product contains chemicals known to the State of California to cause cancer, birth defects or other reproductive harm.

Contents

	PAGE
Introduction	2
Contents	2
Attention Statements	2
Safety and operation labels	3
Safety	3
Product Description	6
Specifications	7
Emission Control (Exhaust & Evaporative)	7
Assembly	8
Mixing Fuel	11
Fuel Requirements	11
Filling the fuel tank	12
Starting the Engine	13
Stopping the Engine	14
Checking Unit Condition	15
Operation	15
General maintenance	17
Adjusting Engine Idle	22
Long Term Storage	22
Product Registration	29
Servicing Information	32
Parts/Serial Number	32
Service	32
Consumer Product Support	32
Warranty Registration	32

IMPORTANT!

The operational procedures described in this manual are intended to help you get the most from this unit as well as to protect you and others from harm. These procedures are guidelines for safe operation under most conditions, and are not intended to replace any safety rules and/or laws that may be in force in your area. If you have questions regarding your Shindaiwa hand-held power equipment, or if you do not understand something in this manual, contact Shindaiwa at the address printed on the back of this Manual.

Attention Statements

Throughout this manual are special "attention statements".

DANGER!

A statement preceded by the triangular attention symbol and the word "DANGER" contains information that should be acted upon to prevent serious injury or death.

WARNING!

A statement preceded by the triangular attention symbol and the word "WARNING" contains information that should be acted upon to prevent serious bodily injury.

IMPORTANT!

A statement preceded by the word "IMPORTANT" is one that possesses special significance.

CAUTION!

A statement preceded by the word "CAUTION" contains information that should be acted upon to prevent mechanical damage.

NOTE:

A statement preceded by the word "NOTE" contains information that is handy to know and may make your job easier.

Safety and operation labels

An articulated hedge trimmer has the potential to cause serious personal injury to the operator or bystanders if misused, abused or mishandled. You must observe all special safety instructions to reduce the risk of personal injury.

Read and follow this manual, make sure anyone using the trimmer does likewise. Failure to do so could result in serious personal injury or machine failure. Keep this manual for future reference.

Keep bystanders at least 50 feet (15 meters) away from the operating trimmer to reduce the risk of being cut by the cutting blades or struck by falling objects or thrown debris.

Always wear a hard hat to reduce the risk of head injuries during operation of this machine. In addition, always wear eye and hearing protection. Shindaiwa recommends wearing a face shield as additional face and eye protection.

Wear non-slip heavy-duty gloves.

The blades / cutting attachments are SHARP! Handle with care.

Safety tip shoes or boots with non-slip sole should be worn.

This product conducts electricity. Keep the product and/or operator a minimum distance of 10 meters (33 feet) away from electrical sources and power lines.

Be aware of the danger of falling debris.

WARNING ! Surface can be hot. Always wear gloves when handling this unit.

Safety

DANGER!

THE ARTICULATED HEDGE TRIMMER IS NOT INSULATED AGAINST ELECTRICAL SHOCK!
Approaching or contacting electrical lines with the trimmer could cause death or serious injury. Keep the trimmer at least 10 meters (33 feet) away from electrical lines or branches that contact electrical lines.

An articulated hedge trimmer has the potential to cause serious personal injury to the operator or bystanders if misused, abused or mishandled. To reduce the risk of injury, you must maintain control at all times, and observe all safety precautions during operation. Never permit a person without training or instruction to operate this trimmer!

WARNING!

Do not make unauthorized modifications or alterations to your articulated hedge trimmer or its components.

WARNING!

Never operate this tool or any other power equipment if you are tired, ill, or under the influence of alcohol, drugs, or any substance that could affect your ability or judgement.

WARNING!

The ignition components of this machine generate an electromagnetic field during operation which may interfere with some pacemakers. To reduce the risk of serious or fatal injury, persons with pacemakers should consult with their physician and the pacemaker manufacturer before operating this machine. In the absence of such information, ECHO does not recommend the use of ECHO products by anyone who has a pacemaker.

Operating Precautions

- Never transport the articulated hedge trimmer or leave it unattended with the engine running. An engine that's running could be accidently accelerated causing the blades to oscillate.
- Make sure that the blade cover is in place when transporting or storing the articulated hedge trimmer.
- Always make sure that the cutter attachment and all handles and guards are properly installed and firmly tightened before operation.
- Inspect for broken, missing or improperly installed parts or attachments.
- Never use a cracked or warped cutter or cutter bar: replace it with a serviceable one and make sure it fits properly.
- Make sure there are no missing or loose fasteners, and that the stop switch and throttle controls are working properly.
- Never adjust blades when the engine is operating.

WARNING!

- Make sure there is always good ventilation when operating the articulated hedge trimmer. Fumes from engine exhaust can cause serious injury or death. Never run the engine indoors!
- Never smoke or light fires near the hedge trimmer. Keep the unit away from excessive heat. Engine fuel is very flammable and fire could lead to serious personal injury or property damage.
- Make sure the cutters are correctly adjusted before operating the articulated hedge trimmer (see the section "Cutter Blade Adjustment" for cutter adjustment procedures). Never attempt cutter adjustment with the engine running!
- Before starting the engine, make sure the cutter is not contacting anything.
- Always confirm safe operation when using the machine.
- Immediately stop the engine with the stop switch if the machine suddenly begins to vibrate or shake.
- Always stop the engine immediately and check for damage if you strike a foreign object or if the machine becomes tangled. Do not operate with broken or damaged equipment.
- When cutting a branch that is under tension, be alert for spring-back so that you will not be struck by the moving branch.
- If a cutter should bind fast in a cut, shut off the engine immediately. Push the branch or tree to ease the bind and free the cutter.
- Always stop the engine and allow it to cool before refueling. Avoid overfilling and wipe off any fuel that may have spilled.
- To reduce fire hazard, keep the engine and muffler free of debris, leaves, or excessive grease
- Keep a Solid Stance. Maintain footing and balance at all times. Do not stand on slippery, uneven or unstable surfaces. Do not work in odd positions or on ladders. Do not over reach.

WARNING!

Hedge Trimmer blades are very sharp. Touching them may lead to severe personal injury. Avoid touching blades whenever possible, and always wear gloves to protect hands

CAUTION!

- Always maintain the articulated hedge trimmer according to this owner's manual and follow the recommended scheduled maintenance.
- Never modify or disable any of the hedge trimmer's safety devices. Doing so may cause damage and lead to personal injury
- Always use genuine Shindaiwa parts and accessories when repairing or maintaining this machine.
- Do not make unauthorized modifications to the articulated hedge trimmer or its components.
- Keep the cutters sharp and properly adjusted.
- Never allow the engine to run at high speed without a load. Doing so could damage the engine.
- When transporting the hedge trimmer in a vehicle, tie it down securely to prevent fuel spillage or damage to the machine.
- Always stop the engine and allow it to cool before refueling. Avoid overfilling and wipe off any fuel that may have spilled.
- Never place flammable material close to the engine muffler and never run the engine without the spark arrestor screen in place.
- Always clear your work area of trash or hidden debris to help ensure good footing.
- Keep the articulated hedge trimmer as clean as possible. Keep it free of loose vegetation, mud, etc.

Safety Equipment and Labels

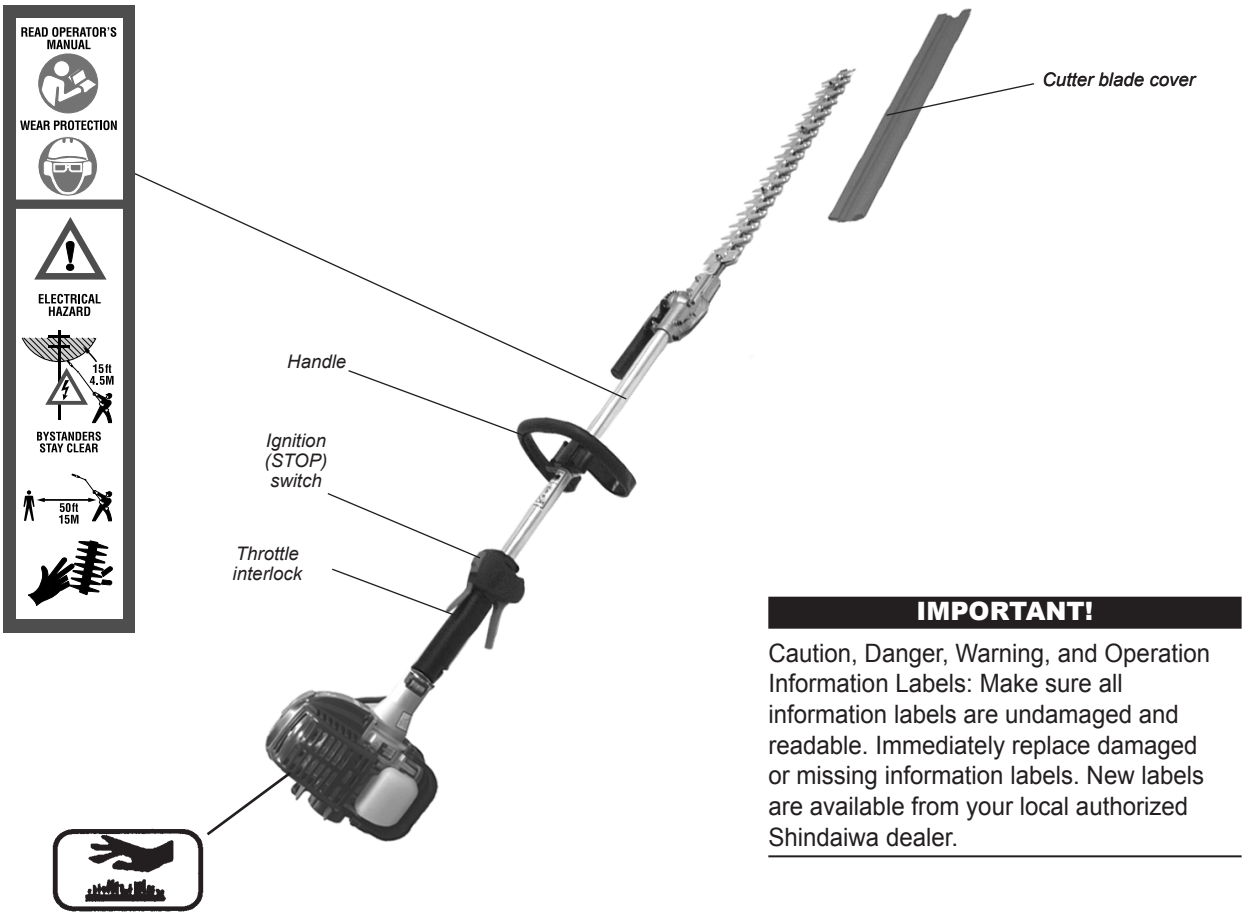

IMPORTANT!

Caution, Danger, Warning, and Operation Information Labels: Make sure all information labels are undamaged and readable. Immediately replace damaged or missing information labels. New labels are available from your local authorized Shindaiwa dealer.

Operator Safety

Always wear a hard hat to reduce the risk of head injuries during operation of this machine.

This machine is designed for trimming hedges. Do not use this machine for other purposes.

ALWAYS clear your work area of trash or hidden debris that could be thrown back at you or toward a bystander.

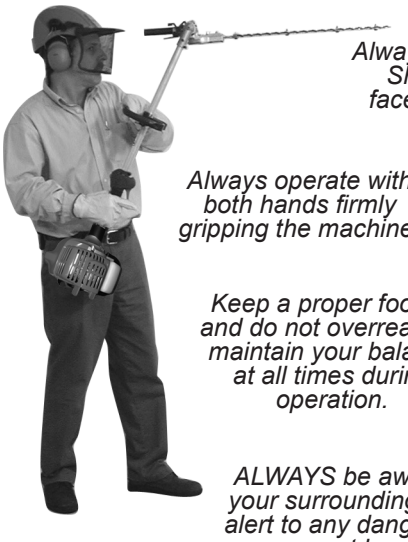

ALWAYS protect yourself from hazards such as thorny brush and flying debris by wearing gloves and close fitting clothing that covers arms and legs. Never wear shorts. Don't wear loose clothing or items such as jewelry that could get caught in machinery or underbrush. Secure long hair so it is above shoulder level.

Always wear eye and hearing protection. Shindaiwa recommends wearing a face shield as additional face and eye protection.

Always operate with both hands firmly gripping the machine.

NEVER allow children to use the unit. Avoid operating near bystanders or when children are nearby.

Keep a proper footing and do not overreach— maintain your balance at all times during operation.

Keep bystanders at least 15 meters (50 feet) away from the operating trimmer to reduce the risk of being struck by falling objects or thrown debris.

ALWAYS be aware of your surroundings and alert to any danger that you may not hear due to machine noise.

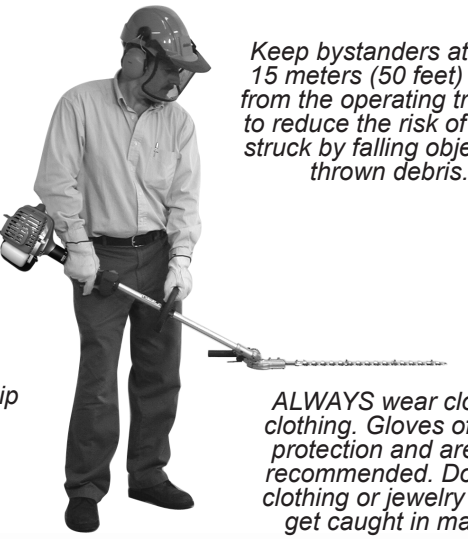

Wear sturdy footwear with nonslip soles to provide good footing. Steel-toed safety boots are recommended. Never operate machine bare-footed.

ALWAYS wear close-fitting clothing. Gloves offer added protection and are strongly recommended. Do not wear clothing or jewelry that could get caught in machinery.

Product Description

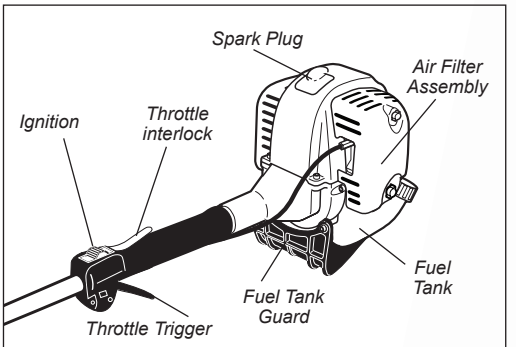

Powerhead Assembly

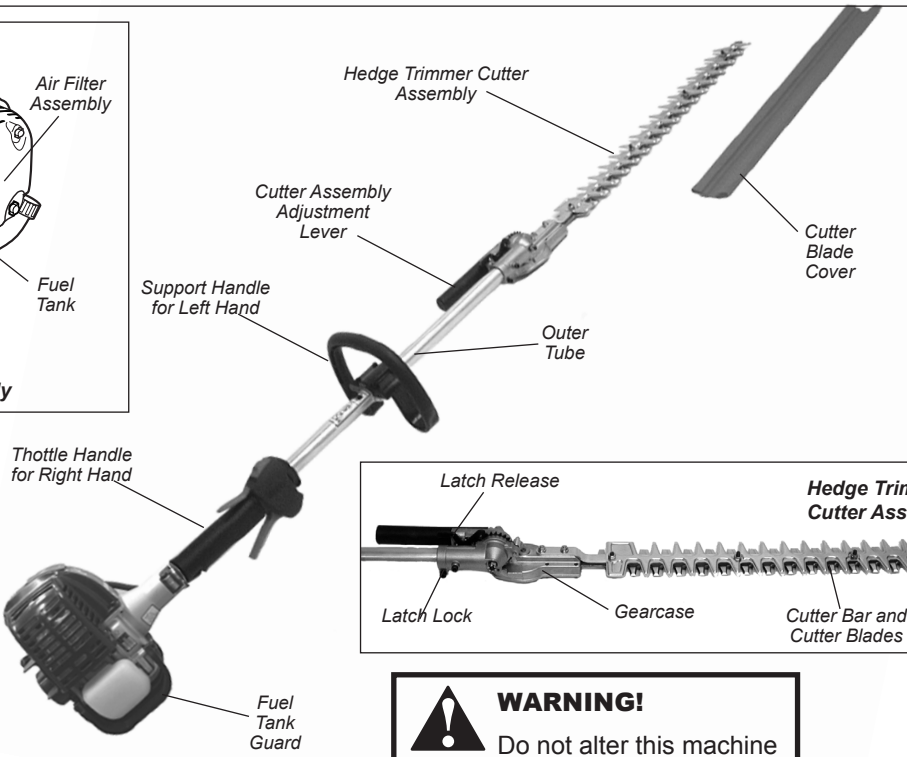

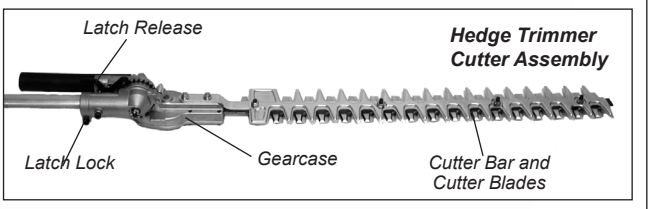

Hedge Trimmer Cutter Assembly

Using the illustration as a guide, familiarize yourself with the Shindaiwa AHS254 articulated hedge trimmer and its various components. Understanding your machine helps ensure top performance, longer service life, and safer operation.

WARNING!

Do not alter this machine or any of its components!

Specifications

Model	AHS254
Engine Type	4-cycle, single cylinder, air cooled
Engine Bore x Stroke	34 x 27 mm (1.34 x 1.06 in.)
Engine Displacement	24.5 cc (1.5 cu. in.)
Unit Weight, Less Fuel	6.39 kg (14.1 lbs.)
Unit Dimensions (LxWxH)	1674 x 224 x 341 mm (65.9 x 8.82 x 13.43 in.)
Fuel Tank Capacity	590 ml (20.1 oz.)
Fuel/oil ratio	50:1 Shindaiwa Red Armor® ISO-L-EGD (ISO/CD 13738) and J.A.S.O. M345- FD, two-stroke, air-cooled engine oil
Carburetor	Diaphragm type
Ignition	Electronic
Spark Plug	NGK CMR5H
Electrode Gap	0.6 mm (0.024 in.)
Torque	16.7 - 18.6 N·m (148-165 in • lbf)
Air Cleaner	Foam pre-filter; main filter: sealed felt
Starting Method	Recoil type
Stopping Method	Slide switch, grounding type
Blade Length	519 mm (20.4 in.)
Clutch Type	Centrifugal clutch
Gear Type	Spur gears
Gear Lubrication	Lithium based grease
Standard Equipment	Tool kit, blade cover.
Idle Speed	3,000 RPM
Clutch Engagement Speed	4,100 RPM
Wide Open Throttle Speed (W.O.T.)	10,500 RPM

Specifications are subject to change without notice.

Emission Control (Exhaust & Evaporative)

EPA 2010 and Later and/or C.A.R.B. TIER III

The emission control system for the engine is EM (engine modification) and, if the second to last character of the Engine Family on the Emission Control Information label (sample below) is “C”, “K”, or “T”, the emission control system is EM and TWC (3-way catalyst). The fuel tank/fuel line emission control system is EVAP (evaporative emissions). Evaporative emissions for California models are only applicable to fuel tanks.

An Emission Control Label is located on the engine. (This is an EXAMPLE ONLY; information on label varies by engine FAMILY).

PRODUCT EMISSION DURABILITY (EMISSION COMPLIANCE PERIOD)

The 50 or 300 hour emission compliance period is the time span selected by the manufacturer certifying the engine emissions output meets applicable emissions regulations, provided that approved maintenance procedures are followed as listed in the Maintenance Section of this manual.

Assembly

Prior To Assembly

Before assembling, make sure you have all the components required for a complete unit:

- Unit assembly
- Operator's Manual
- Emission Control Warranty Statement
- Cutter blade cover
- Assembly Tool (s)

Carefully inspect all components for damage.

IMPORTANT!

The terms “left”, “left-hand”, and “LH”; “right”, “right-hand”, and “RH”; “front” and “rear” refer to directions as viewed by the operator during normal operation.

Blade Guard Removal/Install

NOTE:

For normal cutting, Shindaiwa strongly recommends the blade guard be installed. In extreme conditions, such as commercial cutting, or when cutting thick and/or dense branches, efficiency may be increased by trimming without the blade guard.

WARNING!

Hedge Trimmer blades are very sharp. Touching them may lead to severe personal injury. Avoid touching blades whenever possible, and always wear gloves to protect hands.

Blade Guard Removal

1. Move stop switch to stop position.
2. Disconnect spark plug wire.

WARNING!

Hedge Trimmer blades are very sharp. Touching them may lead to severe personal injury. Use a socket and extension when removing lock nuts in order to keep hands at a safe distance from sharp blades.

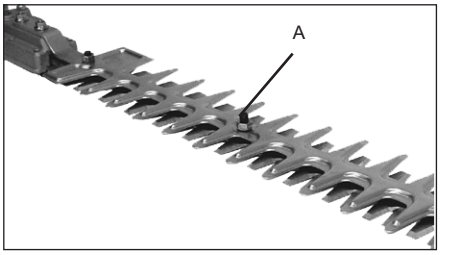

3. Remove four (4) blade guard lock nuts (A).
4. Remove blade guard.
5. Install four (4) lock nuts.

NOTE:

Use new lock nuts every other time blade guard is installed or removed.

6. Adjust blades. See “Cutter blade adjustment” section.

Install Blade Guard

1. Move stop switch to stop position.
2. Disconnect spark plug wire.

WARNING!

Hedge Trimmer blades are very sharp. Touching them may lead to severe personal injury. Use a socket and extension when removing lock nuts in order to keep hands at a safe distance from sharp blades.

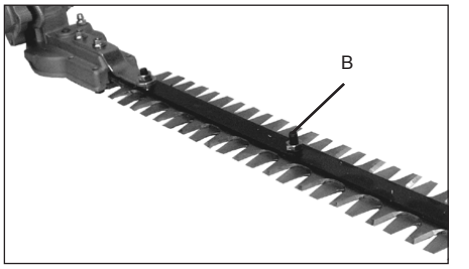

3. Remove four (4) lock nuts (B).
4. Install blade guard.
5. Secure blade guard with four (4) lock nuts.
6. Adjust blades. See “Cutter blade adjustment” section.

IMPORTANT!

If blade guard is damaged or show signs of wear, replace it.

NOTE:

Use new lock nuts every other time blade guard is installed or removed.

Handle

This unit comes with the handle installed. It can be readjusted for operator comfort in the following manner.

1. Loosen the four hex screws.
2. Rotate/slide handle assembly to best position for operator comfort, usually 25 cm (10 in.) ahead of the throttle assembly.
3. Tighten hex screws in a crisscross manner.

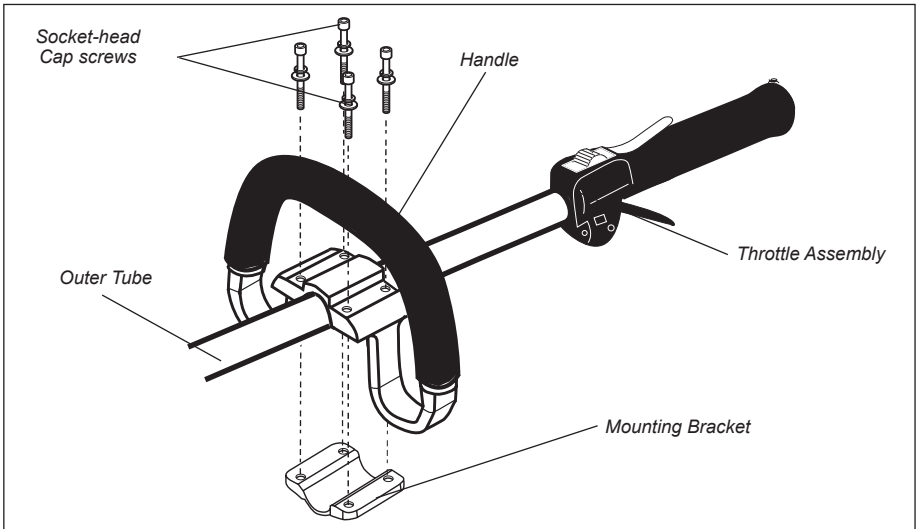

Position the handle on the outer tube as shown

Adjusting the Hedge Trimmer Cutter Assembly

WARNING!

Never run the engine when adjusting the cutter assembly.

WARNING!

- The cutter blades are very sharp. Do not grasp the blades with your hands. Always use gloves when working near the cutter assembly.
- Do not allow the blades to contact your body.
- Do not touch the cutter blades when the engine is running. The blades can oscillate even if the engine is idling.

1. Position the hedge trimmer on a flat, level surface.
2. With your right hand, grasp the outer tube near the handle. With your left hand, grip the adjustment lever on the cutter assembly.
3. With the index finger of your left hand, press the latch lock. With your left thumb, press the latch release.

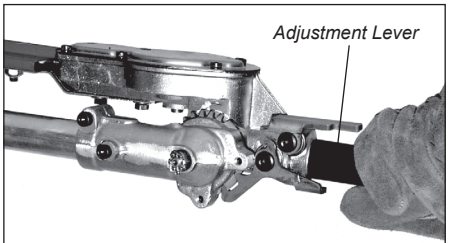

Grasp the outer tube near the handle

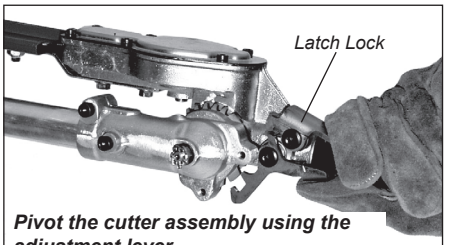

Pivot the cutter assembly using the adjustment lever...

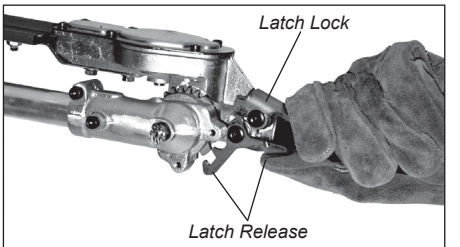

Press the latch lock

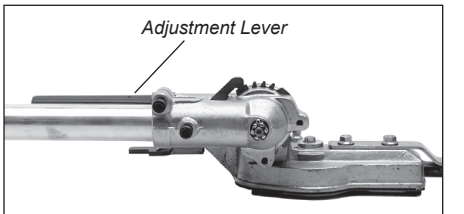

Make sure the latch lock and the latch release return securely to the locked position

4. While holding the latch release down, pivot the cutter assembly away from you using the adjustment lever until it is at the desired cutting angle.

IMPORTANT!

The latch lock provides an interlock to help prevent inadvertent depression of the latch release.

5. Release the latch lock and the latch release. Make sure the latch lock and the latch release return securely to the locked position.
6. Remove the cover from the cutter blade. The engine now may be started (refer to the section ”Starting the Engine”.)

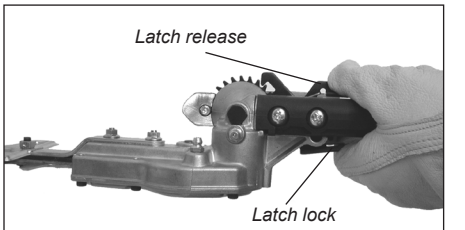

With the index finger of your left hand, press the latch lock. With your left thumb, press the latch release.

Assembly (continued)

Travel limiter and adjustment range

NOTE:

This articulated hedge trimmer is equipped with a travel limiter that prevents the cutter assembly from rotating outside of the 90°- 225° range.

The cutter assembly can be adjusted to 10 different positions ranging from 90° to 225° from the outer tube as shown. Always make sure the latch lock is securely locked after each adjustment.

WARNING!

Always make sure the latch lock is securely locked after each adjustment

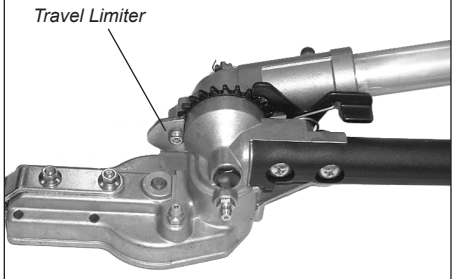

The travel limiter prevents the cutter assembly from rotating outside of the 90°- 225° range

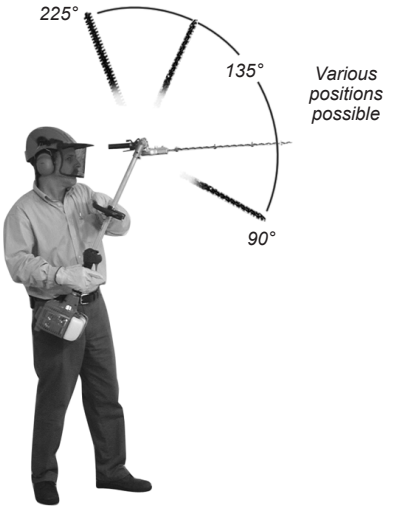

The cutter assembly can be adjusted to 10 different positions

Adjusting cutter assembly for storage or transportation

WARNING!

Never run the engine when adjusting the cutter assembly.

1. With the engine off, install the blade cover onto the blade.
2. Using the procedures described above, rotate the cutter assembly so it is parallel to the tube. Make sure the latch lock and the latch release return securely to a locking position.
3. Make sure the blade cover is in place on the blade before storing or transporting.

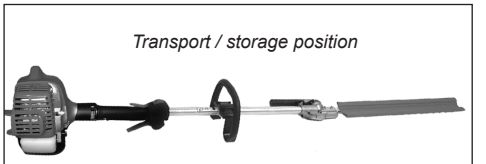

Make sure the blade cover is in place before storing or transporting

Throttle trigger free play

The throttle trigger free play should be approximately 4 - 6 mm (3/16 - 1/4 in.). Make sure that the throttle trigger operates smoothly without binding. If it becomes necessary to adjust the trigger free play, follow the procedures and illustrations that follow.

1. Loosen the air cleaner cover knob(s) and remove the air cleaner cover.
2. Turn the cable adjuster in or out as required to obtain proper free play 4 - 6 mm (3/16 - 1/4 in.).
3. Reinstall the air cleaner cover.

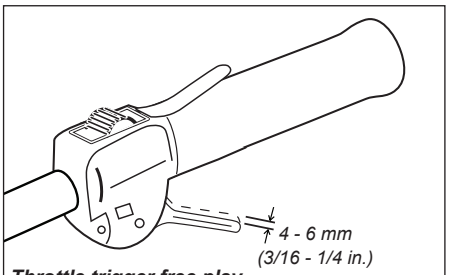

Throttle trigger free play

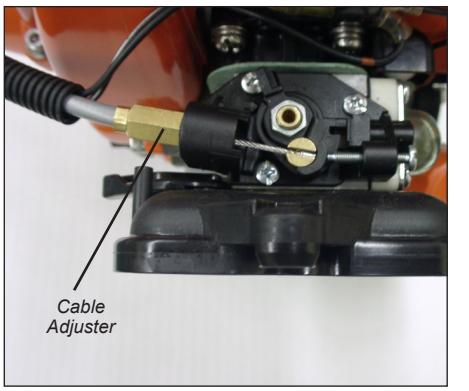

Mixing Fuel

WARNING!

Alternative fuels, such as E15 (15% ethanol), E85 (85% ethanol) or any fuels not meeting Shindaiwa requirements are NOT approved for use in Shindaiwa gasoline engines. Use of alternative fuels may cause performance problems, loss of power, overheating, fuel vapor lock, and unintended machine operation, including, but not limited to, improper clutch engagement. Alternative fuels may also cause premature deterioration of fuel lines, gaskets, carburetors and other engine components.

Fuel Requirements

Gasoline - Use 89 Octane [R+M/2] (mid grade or higher) gasoline known to be good quality. Gasoline may contain up to 10% Ethanol (grain alcohol) or 15% MTBE (methyl tertiary-butyl ether). Gasoline containing methanol (wood alcohol) is NOT approved. ECHO brand Power Fuel™ is 93 octane, ethanol-free fuel premixed with ECHO Red Armor® engine oil at 50:1 ratio. Use of ECHO Power Fuel™ is recommended to extend engine life in all air-cooled 2-stroke and 2/4-stroke hybrid engines.

Hybrid 4™ Mixture Oil - Engine oil meeting ISO-L-EGD (ISO/CD 13738) and J.A.S.O. M345/FD standards must be used. Shindaiwa highly recommends using Shindaiwa Red Armor™ engine oil in all Shindaiwa Hybrid 4™ engines to protect the engine from harmful carbon build up, maintain engine performance, and increase engine life. Shindaiwa Red Armor™ engine oil exceeds ISO-L-EGD and J.A.S.O. M345/FD performance requirements. Engine problems due to inadequate lubrication caused by failure to use an ISO-L-EGD (ISO/CD 13738) and J.A.S.O. M345/FD certified oil will void the engine warranty.

IMPORTANT!

Shindaiwa Red Armor™ engine oil may be mixed at 50:1 ratio for application in all Shindaiwa engines sold in the past, regardless of ratio specified in those manuals.

IMPORTANT!

Stored fuel ages. Do not mix more fuel than you expect to use in thirty (30) days, ninety (90) days when a fuel stabilizer is added. Use of unmixed, improperly mixed, or stale fuel, may cause hard starting, poor performance, or severe engine damage and void the product warranty. Read and follow instructions in the Long Term Storage section of this manual.

Handling Fuel

DANGER

Fuel is VERY flammable. Use extreme care when mixing, storing or handling or serious personal injury may result.

- Use an approved fuel container.
- DO NOT smoke near fuel.
- DO NOT allow flames or sparks near fuel.
- Fuel tanks/cans may be under pressure. Always loosen fuel caps slowly allowing pressure to equalize.
- NEVER refuel a unit when the engine is HOT or RUNNING!
- DO NOT fill fuel tanks indoors. ALWAYS fill fuel tanks outdoors over bare ground.
- DO NOT overfill fuel tank. Wipe up spills immediately.
- Securely tighten fuel tank cap and close fuel container after refueling.
- Inspect for fuel leakage. If fuel leakage is found, do not start or operate unit until leakage is repaired.
- Move at least 3 m (10 ft.) from refueling location before starting the engine.

Mixing Instructions

1. Fill an approved fuel container with half of the required amount of gasoline.
2. Add the proper amount of engine oil to gasoline.
3. Close container and shake to mix oil with gasoline.
4. Add remaining gasoline, close fuel container, and remix.

Fuel to Oil Mix - 50:1 Ratio			
US		Metric	
Gas	Oil	Gas	Oil
Gallons	Oz.	Liter	CC.
1	2.6	5	100
2	5.2	10	200
5	13	25	500

IMPORTANT!

Spilled fuel is a leading cause of hydrocarbon emissions. Some states may require the use of automatic fuel shut-off containers to reduce fuel spillage.

After use

- DO NOT store a unit with fuel in its tank. Leaks can occur. Return unused fuel to an approved fuel storage container.

Storage - Fuel storage laws vary by locality. Contact your local government for the laws affecting your area. As a precaution, store fuel in an approved, airtight container. Store in a well-ventilated, unoccupied building, away from sparks and flames.

IMPORTANT!

Stored fuel may separate. ALWAYS shake fuel container thoroughly before each use.

Filling the fuel tank

WARNING!
Minimize the Risk of Fire

- **NEVER** smoke or light fires near the engine.
- **ALWAYS** stop the engine and allow it to cool before refueling.
- **ALWAYS** Wipe all spilled fuel and move at least 3 meters (10 feet) from the fueling point and source before starting.
- **NEVER** place flammable material close to the engine muffler.
- **NEVER** operate the engine without the muffler and spark arrester screen in place and in good working condition.
- **FUEL IS HIGHLY FLAMMABLE.**
- **ALWAYS** store gasoline in a container approved for flammable liquids.
- **ALWAYS** inspect the unit for fuel leaks before each use. During each refill, check that no fuel leaks from around the fuel cap and/or fuel tank.
  If fuel leaks are evident, stop using the unit immediately. Fuel leaks must be repaired before using the unit.
- **ALWAYS** move the unit at least 3 meters (10 feet) away from a fuel storage area or other readily flammable materials before starting
  the engine.

1. Place the unit on a flat, level surface.
2. Clear any dirt or other debris from around the fuel filler cap.

CAUTION!

Slowly remove the fuel cap only after stopping the engine

3. Remove the fuel cap, and fill the tank with clean, fresh fuel.
4. Reinstall the fuel filler cap and tighten firmly.
5. Wipe away any spilled fuel before starting engine.

Starting the Engine

IMPORTANT!

Engine ignition is controlled by a two position switch mounted on the throttle housing labeled, “I” for ON or START and “O” for OFF or STOP.

WARNING!

The attachment will operate immediately when the engine starts, and could result in possible serious injury. Keep movable parts of the attachment away from objects that could become entangled or thrown, and surfaces that could cause loss of control.

NOTE:

The blade cover is used for transportation and storage. Remove blade cover before using the unit.

WARNING!

Never start the engine from the operating position.

1. Slide the ignition switch to the “ON” position.
2. Set the throttle trigger to the “fast idle”:
   a. Depress and hold the throttle lock, then squeeze the throttle trigger.
   b. Depress and hold the fast idle button.
   c. Release the throttle trigger and throttle lock, then release fast idle button.

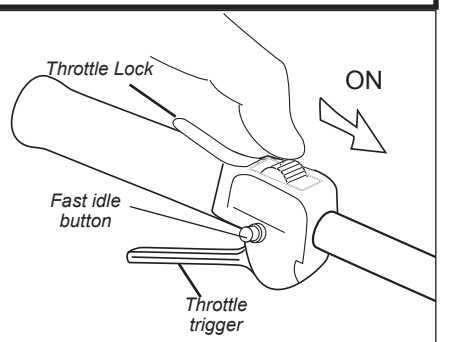

Slide ignition to ON

3. Press the primer bulb until fuel can be seen flowing in the transparent return tube.

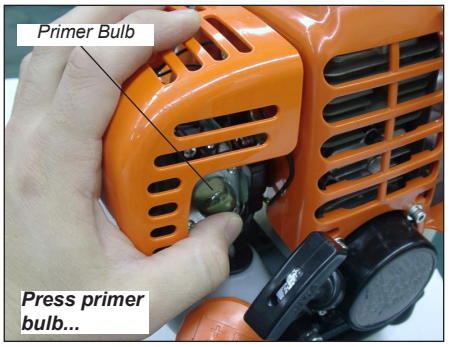

Press primer bulb...

IMPORTANT!

The primer system only pushes fuel through the carburetor. Repeatedly pressing the primer bulb will not flood the engine with fuel.

4. Set the choke lever to the CLOSED position if engine is cold.

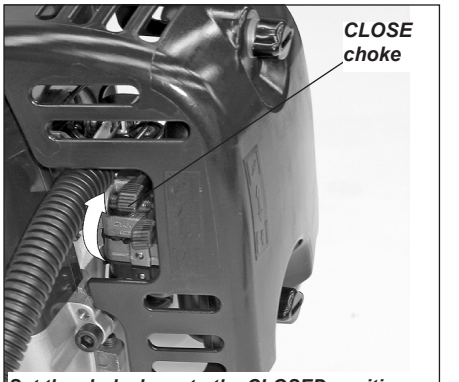

Set the choke lever to the CLOSED position

Starting the Engine (continued)

5. While holding the outer tube firmly with left hand. Use your other hand to slowly pull the recoil starter handle until resistance is felt, then pull quickly to start the engine.

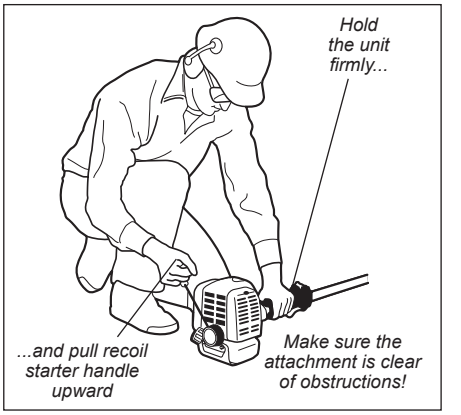

> **CAUTION!**
>
> Do not pull the recoil starter to the end of the rope travel. Pulling the recoil starter to the end of the rope travel can damage the starter.

IMPORTANT!

If the engine fails to start after several attempts with the choke in the closed position, the engine may be flooded with fuel. If flooding is suspected, refer to the ”Starting a Flooded Engine” section of this manual.

6. When the engine starts, slowly move the choke lever to the “OPEN” position. (If the engine stops after the initial start, close the choke and restart.)
7. Operating the throttle will automatically disengage the fast idle setting.

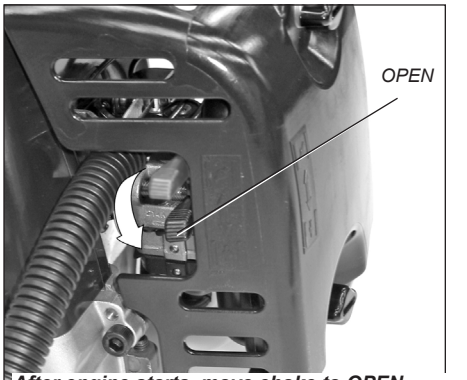

After engine starts, move choke to OPEN position

When the Engine Starts...

- After the engine starts, allow the engine to warm up at idle 2 or 3 minutes before operating the unit.
- If the engine does not continue to run, repeat the appropriate cranking procedures for a cold or warm engine. When the engine starts, clear excess fuel from the combustion chamber by accelerating the engine several times with the throttle trigger.
- Advancing the throttle makes the cutting attachment move faster; releasing the throttle permits the attachment to stop moving. If the cutting attachment continues to move when the engine returns to idle, carburetor idle speed should be adjusted (see “Adjusting Engine Idle”.).

If the engine does not start

- Repeat the appropriate starting procedure for a cold or warm engine.
- If the engine still fails to start, use the procedures for “Starting a flooded engine.”

Starting a flooded engine

1. Slide the ignition switch to the “**I**” (ON) position.
2. Open the choke, put the throttle lever in the full throttle position, then clear excess fuel from the combustion chamber by cranking the engine several times.
3. If the engine still fails to start or fire, refer to the troubleshooting flow chart at the end of this manual.

Stopping the Engine

Idle the engine briefly before stopping (about 2 minutes), then slide the ignition switch to the “**O**” (Engine OFF) position.

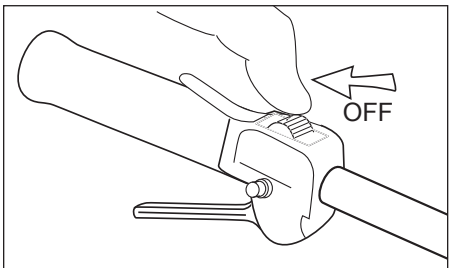

Slide ignition to OFF

Checking Unit Condition

NEVER operate the unit with protective devices removed!

Use only authorized Shindaiwa parts and accessories with your Shindaiwa hedge trimmer. Do not make modifications to this unit without written approval from Shindaiwa.

ALWAYS make sure the cutting attachment is properly installed and firmly tightened before operation.

NEVER use a cracked or warped cutting attachment: replace it with a serviceable one.

ALWAYS make sure the cutting attachment fits properly into the appropriate attachment holder. If a properly installed attachment vibrates, replace the attachment with new one and re-check.

ALWAYS stop the engine immediately and check for damage if you strike a foreign object or if the unit becomes tangled. Do not operate with broken or damaged equipment.

NEVER allow the engine to run at high RPM without a load. Doing so could damage the engine.

NEVER operate a unit with worn or damaged fasteners or attachment holders.

WARNING!

A cutting attachment shield or other protective device is no guarantee of protection against ricochet. YOU MUST ALWAYS GUARD AGAINST FLYING DEBRIS!

Operation

This machine is designed especially for trimming hedges.

Never use this machine for any other purposes. Never try to cut stones, metals, plastics or any other hard objects. Using this Articulated Hedge Trimmer for other purposes than trimming hedges may damage the machine or cause serious injury.

Before trimming:

- Wear suitable protective clothing and equipment. See the Safety section for information.
- Choose the best working position for safety against the falling objects (branches, etc.).
- Start the engine.
- Rest when you feel fatigued.
- Never stand directly underneath the branch you are cutting. Be aware of falling branches. Note that a branch may spring back at you after it hits the ground.

WARNING!

Moving parts can amputate fingers or cause severe injuries. Keep hands, clothing and loose objects away from all openings. Always stop engine, disconnect spark plug, and make sure all moving parts have come to a complete stop before removing obstructions, clearing debris, or servicing unit.

WARNING!

Engine exhaust IS HOT, and contains Carbon Monoxide (CO), a poison gas. Breathing CO can cause unconsciousness, serious injury, or death. Exhaust can cause serious burns. ALWAYS position unit so that exhaust is directed away from your face and body.

WARNING!

Operation of this equipment may create sparks that can start fires. This unit is equipped with a spark arrestor to prevent discharge of hot particles from the engine. Metal blade use also can create sparks if the blade strikes rocks, metal, or other hard objects. Contact local fire authorities for laws or regulations regarding fire prevention requirements.

Operation (continued)

Working Position

- Hold the shaft grip above the powerhead with your right hand, and the loop handle with your left hand.
- Your left arm should be extended to the most comfortable position.

NOTE:

Rest when you feel fatigued.

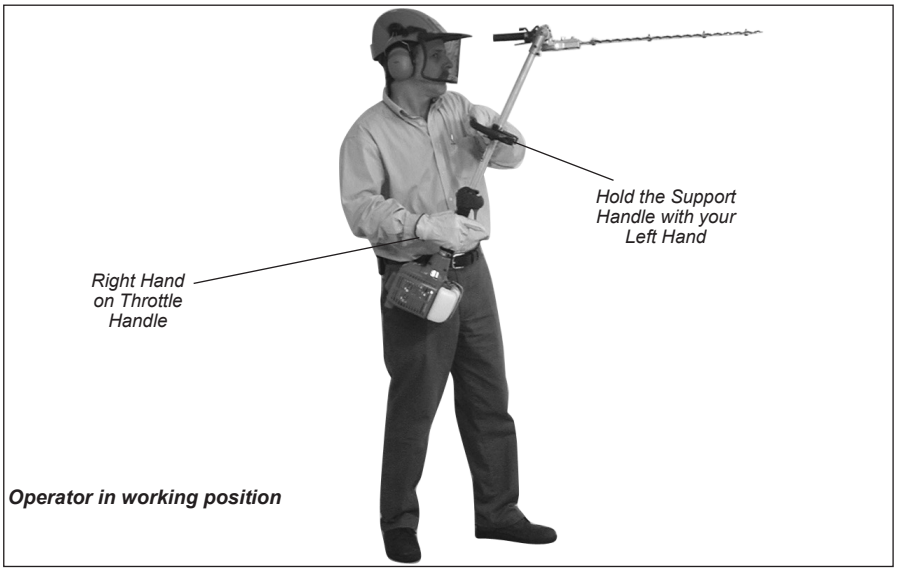

Operator in working position

Using the Hedge Trimmer

Preparations

Use power pruner attachment to cut out thick branches first.

Cutting Sequence

If a radial cut is necessary, cut a little at a time in several passes.

Cutting Techniques

Vertical Cut:

Swing the blade up and down in an arc as you move along the hedge. Use both sides of the cutting blade.

Cut without standing directly next to the hedge, e.g., with a flower bed between operator and hedge.

Overhead Cut:

Hold the shaft upright with a 90° blade angle to cut an upper surface of a hedge.

Horizontal Cut:

Hold the cutting blade at an angle of 0° to 10° as you swing the hedge trimmer horizontally.

Swing the blade in an arc towards the outside of the hedge so that the cuttings are swept on to the ground.

Cut without standing directly in front of the hedge, e.g., reach over a flower bed.

Cut close to the ground from a standing position, e.g., for low shrubs.

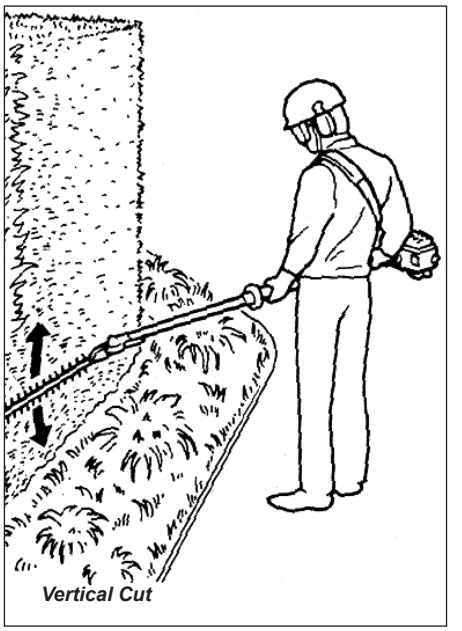

Vertical Cut

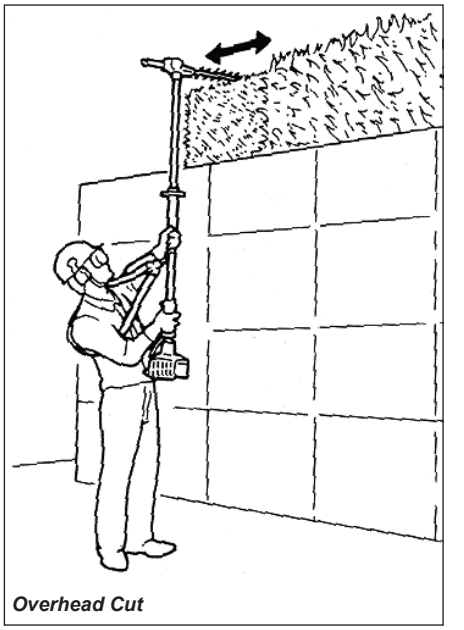

Overhead Cut

Horizontal Cut

Horizontal Cut at ground level

General maintenance

IMPORTANT!

MAINTENANCE, REPLACEMENT OR REPAIR OF EMISSION CONTROL DEVICES AND SYSTEMS MAY BE PERFORMED BY ANY REPAIR ESTABLISHMENT OR INDIVIDUAL; HOWEVER, WARRANTY REPAIRS MUST BE PERFORMED BY A DEALER OR SERVICE CENTER AUTHORIZED BY ECHO, INC. THE USE OF PARTS THAT ARE NOT EQUIVALENT IN PERFORMANCE AND DURABILITY TO AUTHORIZED PARTS MAY IMPAIR THE EFFECTIVENESS OF THE EMISSION CONTROL SYSTEM AND MAY HAVE A BEARING ON THE OUTCOME OF A WARRANTY CLAIM.

WARNING!

Before performing any maintenance, repair, or cleaning work on the unit, make sure the engine and cutting attachment are completely stopped. Disconnect the spark plug wire before performing service or maintenance.

WARNING!

Non-standard accessories, cutting attachment, or replacement parts may not operate properly with your unit and may cause damage and lead to personal injury.

NOTE:

Using non-standard replacement parts could invalidate your Shindaiwa warranty.

Muffler

This unit must never be operated with a faulty or missing spark arrester or muffler. Make sure the muffler is well secured and in good condition. A worn or damaged muffler is a fire hazard and may also cause hearing loss.

Spark Plug

Keep the spark plug and wire connections tight and clean.

Fasteners

Make sure nuts, bolts, and screws (except carburetor adjusting screws) are tight.

Air Filter

The H4 engine that powers your Shindaiwa model is a hybrid 4-stroke engine. As a hybrid, the engine is lubricated by oil mixed with the gasoline and air from the carburetor that moves through and around the internal parts of the engine in a similar way that a 2-stroke engine is lubricated.
Without the heavy duty 2-stage air filter equipped on all H4 engines, dust and dirt could also move through the engine, decreasing engine life, increasing valve wear and the need for more frequent valve adjustments. To keep your H4 engine strong and reliable, Shindaiwa recommends that you check and service the air filter as instructed in the 10-Hour Maintenance section that follows.

Daily maintenance

Prior to each work day, perform the following:

- Remove all dirt and debris from the engine, check the cooling fins and air cleaner for clogging, and clean as necessary.
- Carefully remove any accumulations of dirt or debris from the muffler and fuel tank. Check cooling air intake area at base of crankcase. Remove all debris. Dirt build-up in these areas can lead to engine overheating, fire, or premature wear.

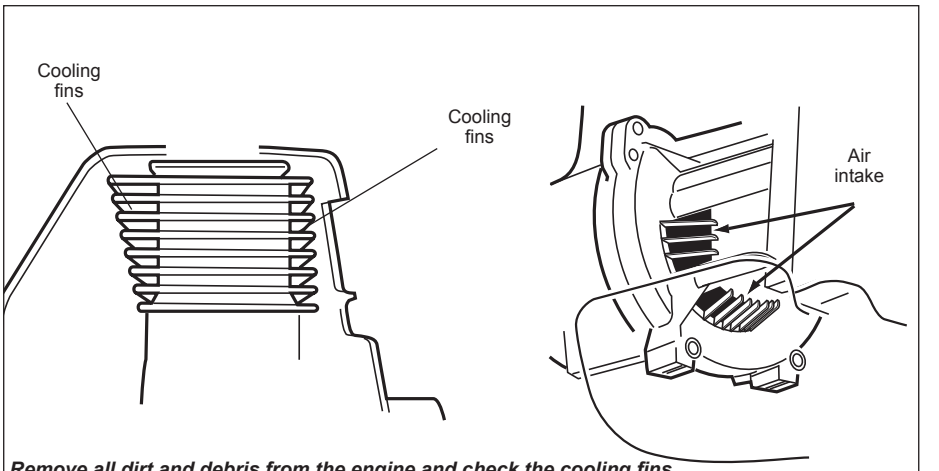

Remove all dirt and debris from the engine and check the cooling fins

WARNING!
Always wear gloves when working around the cutter assembly.

- Lubricate the blades before use and after refueling. Check the cutters for damage or incorrect adjustment.
- Clean any debris or dirt from the cutting attachment.
- Check for loose or missing screws or components. Make sure the cutter attachment is securely fastened.
- Check the entire unit for leaking fuel or grease.
- Make sure nuts, bolts, and screws (except carburetor idle speed adjusting screws) are tight.

10-Hour maintenance
(more frequently in dusty conditions)

1. Remove the air filter cover by loosening the cover screw(s) and lifting.
2. Remove and inspect the pre-filter. If the pre-filter is torn or otherwise damaged, replace it with a new one.
3. Clean the pre-filter with soap and water. Let dry before reinstalling.
4. Inspect the air filter element. If the element is damaged or distorted, replace it with a new one.
5. Tap filter gently on a hard surface to dislodge debris from element or use compressed air from the inside to blow debris out and away from the air filter element.
6. Install the air filter element, pre-filter and cover in the reverse order of removal.

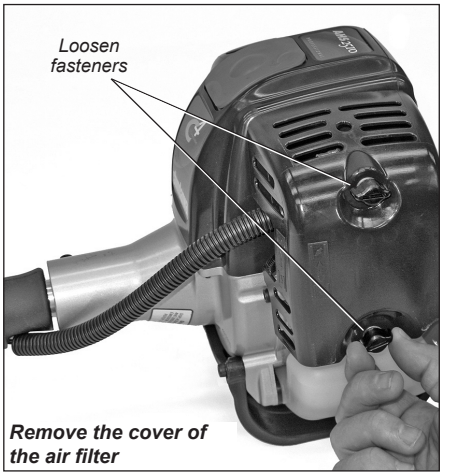

Remove the cover of the air filter

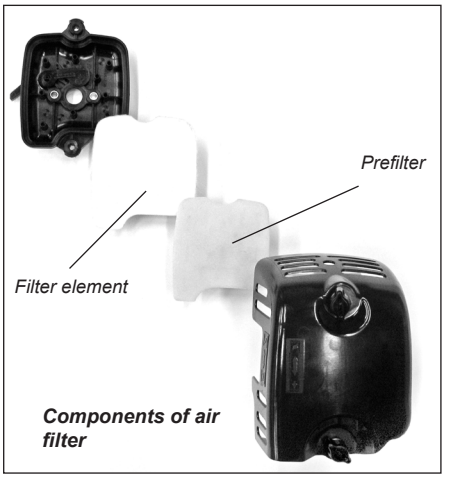

Components of air filter

IMPORTANT!
Direct the air stream at the inside face of the filter only!

CAUTION!
Never operate the unit if the air cleaner assembly is damaged or missing!

10/15-Hour maintenance
Remove and clean or replace the spark plug.

- Clean the spark plug. Adjust electrode gap according to the values listed in the ”Specifications” section. If the spark plug must be replaced, use only the type recommended in ”Specifications” or equivalent resistor type spark plug of the correct heat range.

CAUTION!
Before removing the spark plug, clean the area around the plug to prevent dirt and debris from getting into the engine’s internal parts.

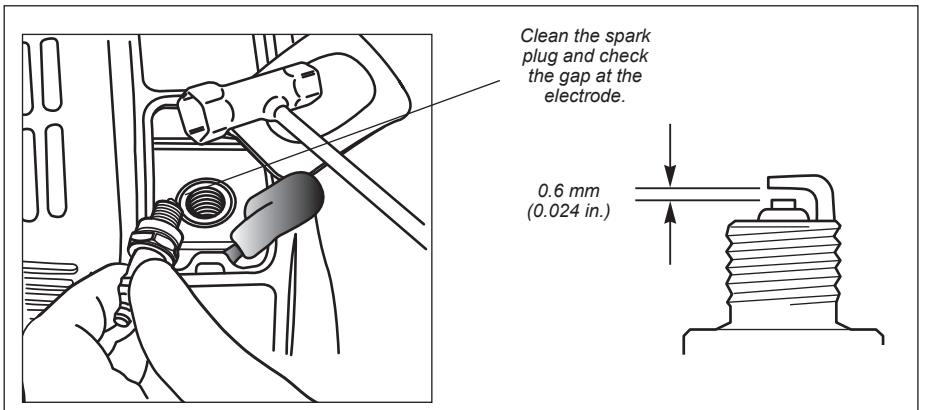

Remove and inspect spark plug

Gearcase lubrication

- Lubricate the cutter assembly gearcase by pumping one or two strokes of lithium based grease into the grease fitting (A) using a lever-type grease gun.

CAUTION!

Over lubricating can cause the gearcase to operate sluggishly and can cause grease to leak out.

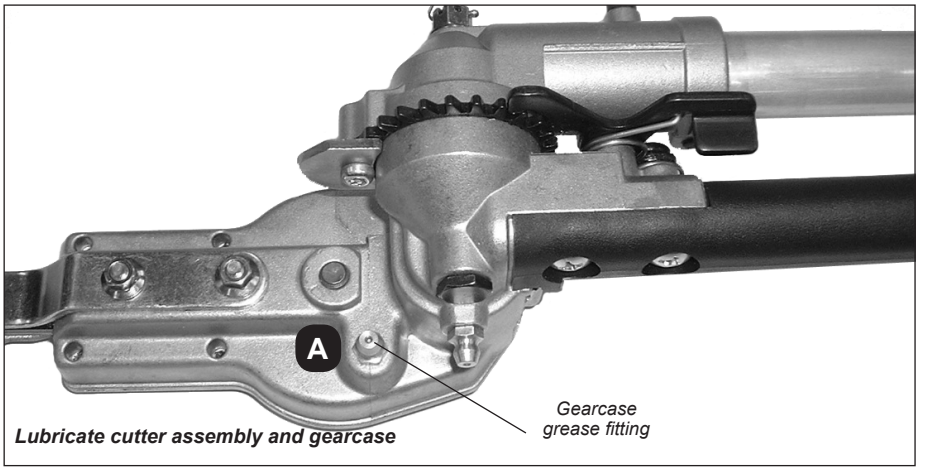

Lubricate cutter assembly and gearcase

50-hour maintenance

Every 50 hours of operation; more frequently in dusty conditions:

Remove and clean the cylinder cover and clean dirt and debris from the cylinder cooling fins.

Remove and replace the fuel filter element.

- Use a hooked wire to extract the fuel filter from inside the fuel tank. Inspect the fuel filter element. If it shows signs of contamination, replace with a genuine Shindaiwa replacement fuel filter element.

CAUTION!

Make sure you do not pierce the fuel line with the end of the hooked wire. The line is delicate and can be damaged easily.

- Before reinstalling the new filter element, inspect the condition of all the fuel system components (fuel pick-up line, fuel return line, tank vent line, tank vent, fuel cap and fuel tank). If damage, splitting or deterioration is noted, the unit should be removed from service until it can be inspected or repaired by a Shindaiwa-trained service technician.

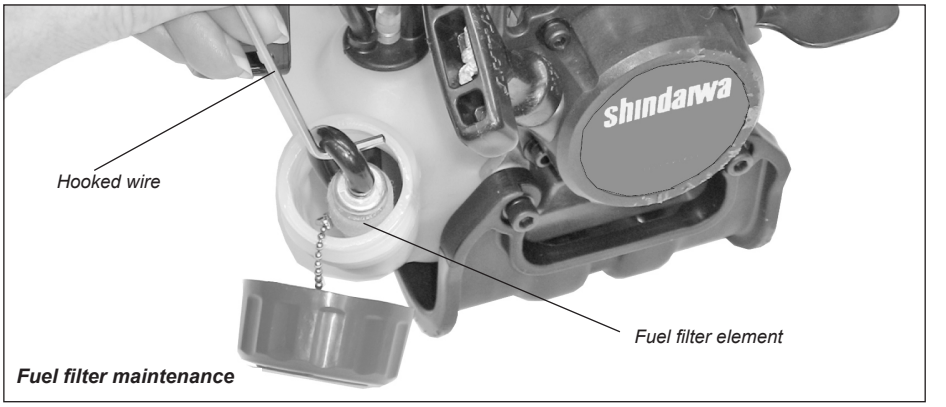

Fuel filter maintenance

NOTE:

Federal EPA regulations require all model year 2012 and later gasoline powered engines produced for sale in the United States to be equipped with a special low permeation fuel supply hose between the carburetor and fuel tank. When servicing model year 2012 and later equipment, only fuel supply hoses certified by EPA can be used to replace the original equipment supply hose. Fines up to $37,500 may be enforced for using an un-certified replacement part.

Maintenance (continued)

Gearcase lubrication

To perform this operation, first remove the gearcase from the outer tube as follows:

1. Loosen the gearcase clamp bolt.
2. Remove the index bolt from the gearcase.
3. Slide the gearcase out of the tube.

CAUTION!

Do not remove the D-shaped shim washer from the gearcase clamp! The shim washer prevents damage from over tightening the tube clamp bolt.

Using a grease gun, pump lithium based grease (about 10 grams [1/3 oz.]) into the grease fitting (B) on the gearcase until you see old grease being purged from the gearcase. Purged grease will be visible in the outer tube cavity.

4. Clean up excess grease, then reassemble the gearcase onto the outer tube. Make sure the index bolt fits into the hole on the outer tube. Securely tighten both bolts.

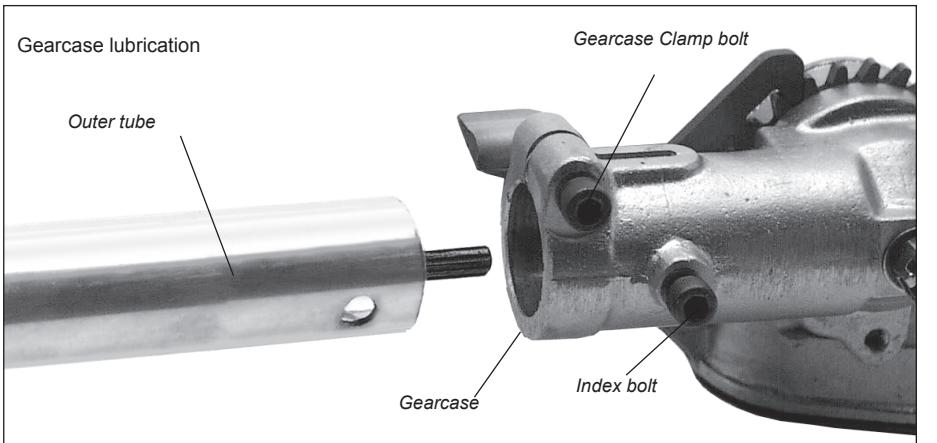

Remove the outer tube from the gearcase

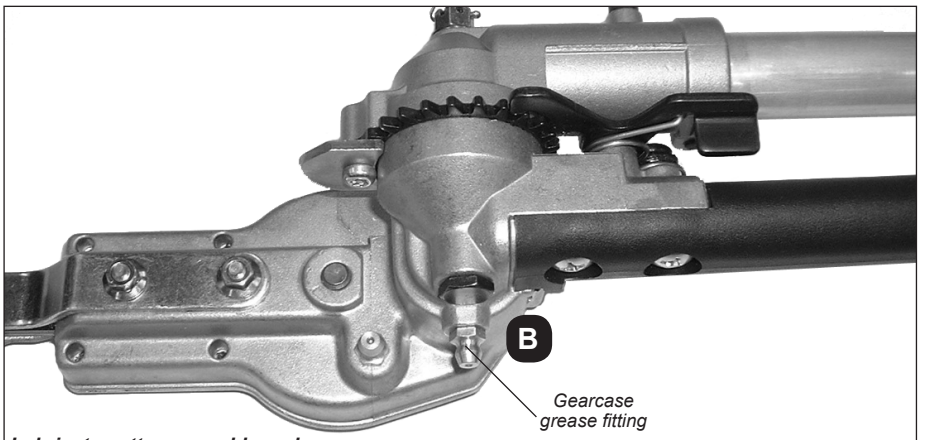

Lubricate cutter assembly and gearcase

135-Hour Maintenance

- Combustion chamber should be decarbonized, and the valve clearance should be adjusted. It is highly recommended that this is done by a Shindaiwa-trained service technician.

Valve Adjustment

1. Remove cylinder cover, rocker arm cover, and spark plug. Rotate the crankshaft while observing the piston through the spark plug opening. When the piston is at the top of the compression stroke (TDC), the valves can be adjusted.
2. Loosen adjuster lock nut so that the 2.5 mm hex socket head adjustment screw can turn freely.

CAUTION!

- Performing a valve adjustment incorrectly may cause hard starting and/or can damage the engine.
- If you are unfamiliar with this engine or uncomfortable with this procedure, consult with an authorized Shindaiwa servicing dealer.

3. Insert 0.10 mm (0.004 in.) feeler gauge between valve stem tip and rocker arm.
4. Turn adjustment screw:
   - clockwise = tighter
   - counterclockwise = looser

   until feeler gauge is almost snug. Back off just enough to allow gauge to slip out with limited resistance.
5. While holding the adjustment screw in place with the hex driver, tighten the lock nut with a wrench.
6. Turn engine over several times, and return to TDC-compression. Recheck with proper feeler gauge to make sure clearance adjustment did not change as a result of tightening the lock nut. Readjust as necessary.
7. Replace rocker arm cover gasket to assure proper sealing and install cover.

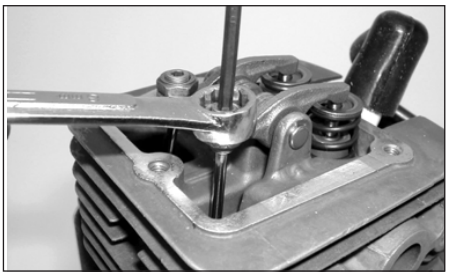

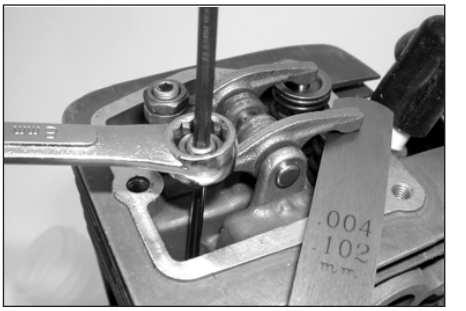

IMPORTANT!

If a new gasket is not available and/or the old gasket is not damaged, the old gasket may be reused. Never use cracked or damaged gaskets!

Cutter blade adjustment

WARNING!
The cutter blades are very sharp! Always wear gloves when working around the cutter assembly.

Cutting performance of your machine depends a great deal on proper cutter blade adjustment. Properly adjusted blades will oscillate freely yet help prevent binding of cut material between blades. Adjust blades as follows:

1. Loosen all blade lock nuts at least one full turn.
2. Tighten each blade shoulder bolt firmly, and then loosen the shoulder bolts 1/4 to 1/2 turn.
3. Working from the gearcase end, lock each bolt in place by firmly tightening its lock nut while preventing the shoulder bolt from turning.
4. When shoulder bolt adjustment is correct, there should be a gap of 0.25–0.50 mm (0.01 - 0.02 in.) between the cutter blades and the flat washers, and the flat washer beneath each bolt head should turn freely.

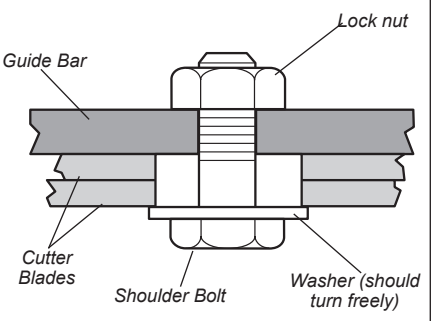

Adjusting cutter blades

CAUTION!
Operating the trimmer with worn or improperly adjusted cutters will reduce cutter performance and may also damage your machine. Never operate the machine with damaged or worn cutters.

Muffler and spark arrester maintenance

If the engine becomes sluggish and low on power, check and clean the spark arrester screen.

WARNING!
Never operate the unit with a damaged or missing muffler or spark arrester! Operating with a missing or damaged spark arrester is a fire hazard and could also damage your hearing.

1. Remove the engine cover.
2. Remove the muffler.
3. Remove the the spark arrester screen and cover.
4. Clean the screen with a stiff bristle brush.
5. Inspect the cylinder exhaust port for any carbon buildup.
6. Reassemble parts in the reverse order.

IMPORTANT!
If you note excessive carbon buildup, consult with an authorized servicing dealer.

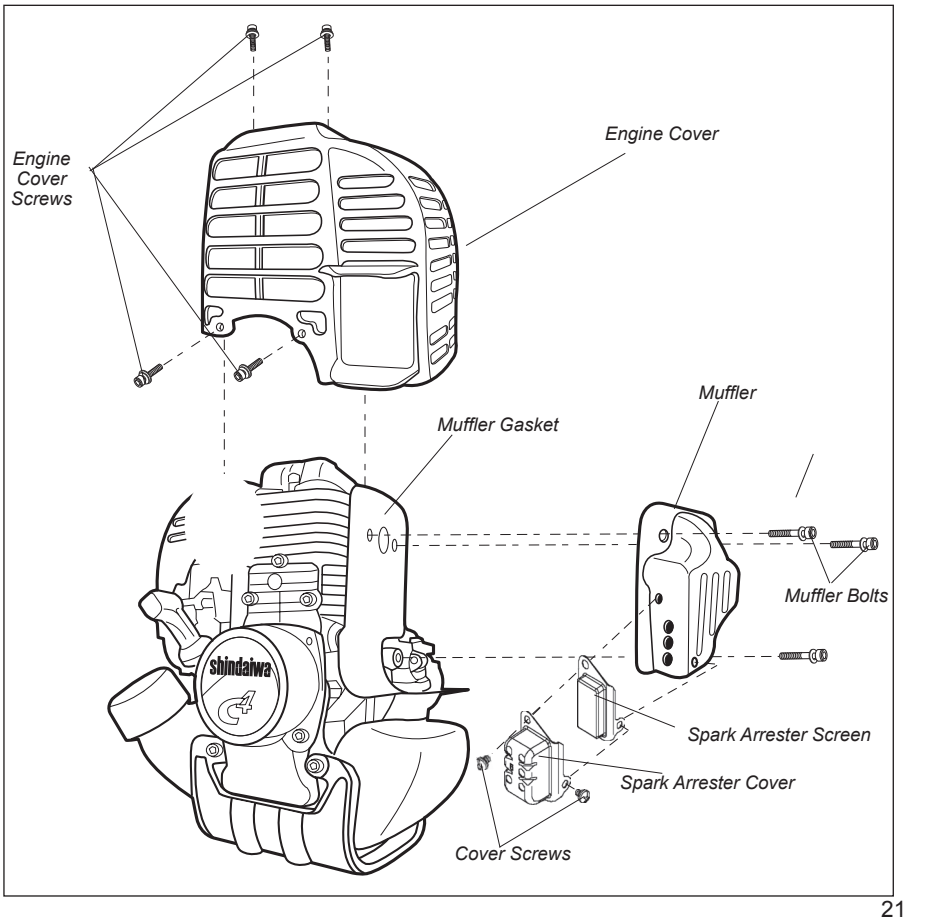

Carburetor Adjustment

Engine Break-In

New engines must be operated a minimum duration of two tanks of fuel break-in before carburetor adjustments can be made. During the break-in period your engine performance will increase and exhaust emissions will stabilize. Idle speed can be adjusted as required.

High Altitude Operation

This engine has been factory adjusted to maintain satisfactory starting, emission, and durability performance up to 1,100 feet above sea level (ASL) (96.0 kPa). To maintain proper engine operation and emission compliance above 1,100 feet ASL the carburetor may need to be adjusted by an authorized Shindaiwa service dealer.

IMPORTANT!

If the engine is adjusted for operation *above* 1,100 feet ASL, the carburetor must be re-adjusted when operating the engine *below* 1,100 feet ASL, otherwise severe engine damage may result.

NOTE:

Every unit is run at the factory and the carburetor is set in compliance with emission regulations. Carburetor adjustments, other than idle speed, must be performed by an authorized Shindaiwa dealer.

Adjusting Engine Idle

The engine must return to idle speed whenever the throttle trigger is released. Idle speed is adjustable, and must be set low enough to permit the engine clutch to disengage the cutting attachment.

WARNING!

The cutting attachment must NEVER move at engine idle! If the idle speed cannot be adjusted by the procedure described here, return the unit to your Shindaiwa dealer for inspection.

Idle Speed Adjustment

1. Place the unit on the ground, then start the engine, and then allow it to idle 2 - 3 minutes until warm.
2. If the attachment moves when the engine is at idle, reduce the idle speed by turning the idle adjustment screw counterclockwise.
3. If a tachometer is available, adjust idle. Check Specifications page for correct idle speed

NOTE:

Carburetor fuel mixture adjustments are preset at factory and cannot be serviced in the field.

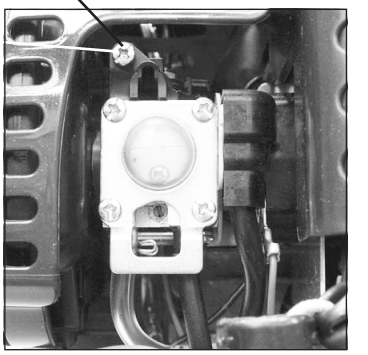

Long Term Storage

Whenever the unit will not be used for 30 days or longer, use the following procedures to prepare it for storage:

- Clean external parts thoroughly and apply a light coating of oil to all metal surfaces.
- Drain all the fuel from the carburetor and the fuel tank.

To do so:

1. Prime the primer bulb until no more fuel is passing through.
2. Start and run the engine until it stops running.
3. Repeat steps 1 and 2 until the engine will no longer start.

CAUTION!

Gasoline stored in the carburetor for extended periods can cause hard starting, and could also lead to increased service and maintenance costs.

IMPORTANT!

All stored fuels should be stabilized with a fuel stabilizer such as STA-BIL™.

NOTE:

Damage resulting from stale or contaminated fuel is not covered by the Shindaiwa warranty policy.

- Remove the spark plug and pour about 7 cc (1/4 oz.) of engine oil into the cylinder through the spark plug hole. Slowly pull the recoil starter 2 or 3 times so oil will evenly coat the interior of the engine. Reinstall the spark plug.
- Before storing the unit, repair or replace any worn or damaged parts.
- Remove the air cleaner element from the carburetor and clean it thoroughly with soap and water. Let dry and reassemble the element.
- Store the unit in a clean, dust-free area.

Troubleshooting Guide

ENGINE DOES NOT START OR HARD TO START

What To Check	Possible Cause	Remedy
Vaporlock.	Engine hot/heat soaked.	Let cool completely and restart.
	Low fuel quality.	Refill with fresh, clean unleaded gasoline with a pump octane of 89 or higher mixed with an air cooled engine oil that meets or exceeds ISO-L-EGD and/or JASO FD classified oils at 50:1 gasoline/oil ratio.
Valve adjustment.	Valve clearance too tight.	Consult with an authorized Shindaiwa servicing dealer. Adjust valves.
	Valve clearance too loose.	

ENGINE DOES NOT START

What To Check		Possible Cause	Remedy
Does the engine crank?	NO	Faulty recoil starter.	Consult with an authorized Shindaiwa servicing dealer.
		Fluid in the crankcase.	
		Internal damage.	
YES			
Good compression?	NO	Loose spark plug.	Tighten and re-test.
		Excess wear on cylinder, piston, rings.	Consult with an authorized Shindaiwa servicing dealer.
YES			
Does the tank contain fresh fuel of the proper grade?	NO	Fuel incorrect, stale, or contaminated; mixture incorrect.	Refill with fresh, clean unleaded gasoline with a pump octane of 89 or higher mixed with an air cooled engine oil that meets or exceeds ISO-L-EGD and/or JASO FD classified oils at 50:1 gasoline/oil ratio.
YES			
Is fuel visible and moving in the return line when priming?	NO	Check for clogged fuel filter and/or vent.	Replace fuel filter or vent as required. Re-start.
		Priming pump not functioning properly.	Consult with an authorized Shindaiwa servicing dealer.
YES			
Is there spark at the spark plug wire terminal?	NO	The ignition switch is in "O" (OFF) position.	Move switch to "I" (ON) position and re-start.
		Shorted ignition ground.	Consult with an authorized Shindaiwa servicing dealer.
		Faulty ignition unit.	
YES			
Check the spark plug.		If the plug is wet, excess fuel may be in the cylinder.	See "Starting a Flooded Engine"
		The plug is fouled or improperly gapped.	Clean and gap the spark plug. Check the Specifications section for the correct plug and gap for your unit. Restart.
		The plug is damaged internally or of the wrong size.	Replace the spark plug. Check the Specifications section for the correct plug and gap for your unit. Restart.

Troubleshooting Guide (continued)

LOW POWER OUTPUT

What To Check	Possible Cause	Remedy
Is the engine overheating?	Operator is overworking the unit.	Use a lower throttle setting.
	Carburetor mixture is too lean.	Consult with an authorized Shindaiwa servicing dealer.
	Improper fuel ratio.	Refill with fresh, clean unleaded gasoline with a pump octane of 89 or higher mixed with an air cooled engine oil that meets or exceeds ISO-L-EGD and/or JASO FD classified oils at 50:1 gasoline/oil ratio.
	Fan, fan cover, cylinder fins dirty or damaged.	Clean, repair or replace as necessary.
	Carbon deposits on the piston or in the muffler.	Consult with an authorized Shindaiwa servicing dealer.
Engine is rough at all speeds. May also have black smoke and/or unburned fuel at the exhaust.	Clogged air cleaner element.	Service the air cleaner element.
	Loose or damaged spark plug.	Tighten or replace the spark plug. Check the Specifications section for the correct plug and gap for your unit.
	Air leakage or clogged fuel line.	Repair or replace fuel filter and/or fuel line.
	Water in the fuel.	Refill with fresh, clean unleaded gasoline with a pump octane of 89 or higher mixed with an air cooled engine oil that meets or exceeds ISO-L-EGD and/or JASO FD classified oils at 50:1 gasoline/oil ratio.
	Piston seizure.	Consult with an authorized Shindaiwa servicing dealer.
	Faulty carburetor and/or diaphragm.	
Engine is knocking.	Overheating condition.	Consult with an authorized Shindaiwa servicing dealer.
	Improper fuel.	Refill with fresh, clean unleaded gasoline with a pump octane of 89 or higher mixed with an air cooled engine oil that meets or exceeds ISO-L-EGD and/or JASO FD classified oils at 50:1 gasoline/oil ratio.
	Carbon deposits in the combustion chamber.	Consult with an authorized Shindaiwa servicing dealer.

Troubleshooting Guide (continued)

ADDITIONAL PROBLEMS

Symptom	Possible Cause	Remedy
Poor acceleration.	Clogged air filter.	Clean the air filter.
	Clogged fuel filter.	Replace the fuel filter.
	Lean fuel/air mixture.	Consult with an authorized Shindaiwa servicing dealer.
	Idle speed set too low.	Adjust idle. Check Specifications page for correct idle speed.
Engine stops abruptly.	Ignition switch turned off.	Reset the switch and re-start.
	Fuel tank empty.	Refill with fresh, clean unleaded gasoline with a pump octane of 89 or higher mixed with an air cooled engine oil that meets or exceeds ISO-L-EGD and/or JASO FD classified oils at 50:1 gasoline/oil ratio.
	Water in the fuel.	
	Clogged fuel filter.	Replace fuel filter.
	Shorted spark plug or loose terminal.	Clean or replace spark plug. Check the Specifications section for the correct plug and gap for your unit. Tighten the terminal.
	Ignition failure.	Replace the ignition unit.
	Piston seizure.	Consult with an authorized Shindaiwa servicing dealer.
Engine difficult to shut off.	Ground (stop) wire is disconnected, or switch is defective.	Test and replace as required.
	Overheating due to incorrect spark plug.	Replace the spark plug. Check the Specifications section for the correct plug and gap for your unit. Restart.
	Overheated engine.	Idle engine until cool.
Top of engine is getting dirty and oily.	Valve cover is leaking.	Consult with an authorized Shindaiwa servicing dealer.
Engine will not idle down.	Idle set too high.	Adjust idle. Check Specifications page for correct idle speed.
	Engine has an air leak.	Consult with an authorized Shindaiwa servicing dealer.
Cutting attachment moves at engine idle.	Engine idle too high.	Adjust idle. Check Specifications page for correct idle speed.
	Broken clutch spring or worn clutch spring boss.	Replace spring/shoes as required, check idle speed.
Excessive vibration.	Loose attachment holder.	Inspect and re-tighten holders securely.
	Warped or damaged attachment.	Inspect and replace attachment as required.
	Loose gearcase.	Tighten gearcase securely.
	Bent main shaft/worn or damaged bushings.	Inspect and replace as necessary.
Cutting attachment will not move.	Shaft not installed in powerhead or gearcase.	Inspect and reinstall as required.
	Broken shaft.	Consult with an authorized Shindaiwa servicing dealer.
	Damaged gearcase.	

Warranty statements

SHINDAIWA LIMITED WARRANTY STATEMENT FOR
PRODUCT SOLD IN USA AND CANADA BEGINNING 01/01/2013

ECHO, INC'S RESPONSIBILITY
ECHO Incorporated's (ECHO, INC.) Limited Warranty, provides to the original purchaser that this Shindaiwa product is free from defects in material and workmanship. Under normal use and maintenance from date of purchase, ECHO, INC. agrees to repair or replace at it's discretion, any defective product free of charge at any authorized Shindaiwa servicing dealer within listed below application time periods, limitations and exclusions. **THIS LIMITED WARRANTY IS ONLY APPLICABLE TO SHINDAIWA PRODUCTS SOLD BY AUTHORIZED SHINDAIWA DEALERS. IT IS EXTENDED TO THE ORIGINAL PURCHASER ONLY, AND IS NOT TRANSFERABLE TO SUBSEQUENT OWNERS EXCEPT FOR EMISSION RELATED PARTS.** Repair parts and accessories replaced under this warranty are warranted only for the balance of the original unit or accessory warranty period. Any damage caused by improper installation or improper maintenance is not covered by this warranty. All parts or products replaced under warranty become the property of ECHO, INC. This warranty is separate from the Emission control warranty statement supplied with your new product. Please consult the Emission Control Warranty Statement for details regarding emission related parts. For a list of Authorized Shindaiwa Dealers refer to WWW.SHINDAIWA.COM or call **1-877-986-7783**.

OWNER'S RESPONSIBILITY
To ensure trouble free warranty coverage it is important that you register your Shindaiwa equipment on-line at WWW.SHINDAIWA.COM or by filling out the warranty registration card supplied with your unit. Registering your product confirms your warranty coverage and provides a direct link if we find it necessary to contact you.

The owner shall demonstrate reasonable care and use, and follow preventative maintenance, storage, fuel and oil usage as prescribed in the operator's manual. Should a product difficulty occur, you must, at your expense, deliver or ship your Shindaiwa unit to an authorized Shindaiwa servicing dealer for warranty repairs (within the applicable warranty period), and arrange for pick-up or return of your unit after the repairs have been made. For your nearest authorized Shindaiwa servicing dealer, call Shindaiwa's Dealer Referral Center, at 1-877-986-7783 or you can locate a Shindaiwa servicing dealer at WWW.SHINDAIWA.COM. Should you require assistance or have questions concerning Shindaiwa's Warranty Statement, you can contact our Consumer Product Support Department at 1-800-673-1558 or contact us through the web at WWW.SHINDAIWA.COM.

PRODUCT WARRANTY PERIOD

HOMEOWNER APPLICATION
- **5 YEAR WARRANTY** - Units for homeowner, or non-income producing use will be covered by this limited warranty for five (5) years from date of purchase.

EXCEPTIONS:
- For engine powered products, the electronic ignition module, flexible drive cable, and solid drive shaft are warranted for the life* of the product on parts only.
- Cutting attachments such as, but not limited to, bars, chains, sprockets, tines, blades, PowerBroom™, belts, and nylon trimmer heads for homeowner or non-income producing use will be covered for failures due to defects in material or workmanship for a period of 60 days from original product purchase date. Any misuse from contact with concrete, rocks, or other structures is not covered by this warranty.
- Multipurpose Tool Attachments carry the same warranty duration as the units they are designed to fit.

COMMERCIAL APPLICATION
- **90 DAY WARRANTY** - All Chain Saws and Cut-Off Saws for commercial, institutional, agricultural, industrial, or income producing use will be covered by this limited warranty for 90 Days from the date of purchase.
- **2 YEAR WARRANTY** - All other units for commercial, institutional, agricultural, industrial, or income producing use will be covered by this limited warranty for two (2) years from the date of purchase.

EXCEPTIONS:
- For engine powered products, the electronic ignition module, flexible drive cables, and solid drive shafts are warranted for the life* of the product on parts only.
- Cutting attachments such as, but not limited to, bars, chains, sprockets, tines, blades, PowerBroom™, belts, and nylon trimmer heads for commercial, institutional, agricultural, industrial, rental, or income producing will be covered for failures due to defects in material or workmanship for a period of 30 days from original product purchase date. Any misuse from contact with concrete, rocks, or other structures is not covered by this warranty.
- Multipurpose Tool Attachments carry the same warranty duration as the units they are designed to fit.

RENTAL APPLICATION - 90 DAYS WARRANTY
- Units for rental use will be covered against defects in material and workmanship for a period of 90 days from the date of purchase.

* ECHO INC's liability under the "Lifetime" coverage is limited to furnishing parts specified under the PRODUCT Warranty PERIOD section of this warranty statement for "Life" free of charge for a period of ten (10) years after the date of the complete unit's final production.

PURCHASED REPAIR PARTS AND ACCESSORIES
• 90-day all applications

ATTENTION ENGINE POWERED PRODUCT OWNERS
This Shindaiwa engine powered product is a quality-engineered unit which has been manufactured to exact tolerances to provide superior performance. To help ensure the performance of the unit, it is required to use engine oil which meets the ISO-L-EGD Standard per ISO/CD 13738 and JASO M345/FD Standards. Shindaiwa Red Armor™ is a premium engine oil specifically formulated to meet ISO-L-EGD (ISO/CD 13738) and JASO M345/FD Standards. The use of engine oils designed for other applications, such as for outboard motors or lawnmowers can result in severe engine damage, and will void your engine limited warranty.

THIS WARRANTY DOES NOT COVER DAMAGE CAUSED BY:
- Lack of lubrication or engine failure, due to the use of engine oils that do not meet the ISO-L-EGD (ISO/CD 13738) and JASO M345/FD Standards. Shindaiwa Red Armor™ Engine Oil meets the ISO-L-EGD and JASO M345/FD Standard. Emission related parts are covered for 5 years homeowner or 2 years commercial use regardless of two-stroke oil used, per the statement listed in the EPA or California Emission Control Warranty Explanation.
- Damage caused by use of gasohol, containing methanol (wood alcohol), or gasoline containing less than 89 octane. Only use gasoline which contains 89 octane or higher. Gasohol which contains a maximum 10% ethanol (grain alcohol) or 15% MTBE (methyl/tertiary/butyl/ether) is also approved. The prescribed mixing ratio of gasoline to oil is listed on the Shindaiwa oil label and covered in your operator's manual.
- Engine damage caused by use of ether or any starting fluids.
- Damage caused by tampering with engine speed governor or emission components, or running engines above specified and recommended engine speeds as listed in your operator's manual.
- Operation of the unit with improperly maintained/removed cutting shield or removed/damaged air filter.
- Damage caused by dirt, pressure or steam cleaning the unit, salt water, corrosion, rust, varnish, abrasives, and moisture.
- Defects, malfunctions or failures resulting from abuse, misuse, neglect, modifications, alterations, normal wear, improper servicing, or use of unauthorized attachments.
- Incorrect storage procedures, stale fuel, including failure to provide or perform required maintenance services as prescribed in the operator's manual. Preventative maintenance as outlined in the operator's manual is the customer's responsibility.
- Failures due to improper set-up, pre-delivery service or repair service by anyone other than authorized Shindaiwa servicing dealer during the warranty period.
- Certain parts and other items are not warranted, including but not limited to: lubricants, starter cords, and engine tune-ups.
- Use of spark plugs other than those meeting performance and durability requirements of the OEM spark plug listed in the Operator's Manuals.
- Overheating or carbon scoring failures due to restricted, clogged exhaust port or combustion chamber, including damage to spark arrester screen.
- Adjustments after the first (30) thirty days and beyond, such as carburetor adjustment and throttle cable adjustment.
- Damage to gears or gear cases caused by contaminated grease or oil, use of incorrect type or viscosity of lubricants, and/or failure to comply with recommended grease or oil change intervals.
- Damage caused by pump or sprayer running dry, pumping or spraying caustic or flammable materials, or lack of or broken strainers.
- Additional damage to parts or components due to continued use after operational problem or failure occurs. Should operational problem or failure occur, the product should not be used, but delivered as is to an authorized Shindaiwa servicing dealer.

It is a dealer's and/or customer's responsibility to complete and return the warranty registration card supplied with your Shindaiwa product or by visiting WWW.SHINDAIWA.COM. Your receipt of purchase including date, model and serial number must be maintained and presented to an authorized Shindaiwa servicing dealer for warranty service. Proof of purchase rests solely with the customer. Some states do not allow limitations on how long an implied warranty lasts, so the above limitations may not apply to you. Some states do not allow the exclusion or limitation of incidental or consequential damages, so you may also have other specific legal rights which vary from state to state. This limited warranty is given by ECHO Incorporated, 400 Oakwood Rd., Lake Zurich, IL 60047.

DISCLAIMER OF IMPLIED WARRANTIES
This limited warranty is in lieu of all other expressed or implied warranties, including any warranty of FITNESS FOR A PARTICULAR PURPOSE OR USE and any implied warranty of **MERCHANTABILITY** otherwise applicable to this product. ECHO, INC. and its affiliated companies shall not be liable for any special incidental or consequential damage, including lost profits. There are no warranties extended other than as provided herein. This limited warranty may be modified only by ECHO, INC.

X7561120400
10/14

NOTES

Product Registration

Thank you for choosing Shindaiwa Power Equipment

Please go to http://www.shindaiwa-usa.com to register your new product on-line. It's FAST and EASY! NOTE: your information will never be sold or misused by ECHO, Inc. Registering your purchase enables us to contact you in the unlikely event of a service update or product recall, and verifies your ownership for warranty consideration.

If you do not have access to the Internet, you can complete the form below and mail to:
ECHO Inc., Product Registration, PO Box 1139, Lake Zurich IL 60047

shindaiwa® PRODUCT REGISTRATION CARD : TARJETA DE REGISTRO : CARTE D'ENREGISTREMENT DU PRODUIT

ONLINE OPTION: Register online and save a stamp! You will be alerted of product updates and/or be sent new Shindaiwa product information and special offers. Simply go to: **www.shindaiwa-usa.com**

OPCIÓN POR INTERNET: ¡Regístrese en la pagina web y ahorre una estampilla! Le alertarán sobre actualizaciones del producto y/o se le enviara información sobre los nuevos productos Shindaiwa y las ofertas especiales. Simplemente visite: **www.shindaiwa-usa.com**

OPTION EN LIGNE : Enregistrer en ligne et épargner un timbre! Vous serez informé sur les nouveaux produits Shindaiwa et les mises à jour de produit ainsi que les offres spéciales. Simplement visitez le: **www.shindaiwa-usa.com**

Please Print : Por Favor Enscriba Con Letra De Molde : En Lettre Carré S.V.P.

Confidential: Information provided will not be shared or sold

Purchaser's Name : Nombre del Comprador : Nom de l'acheteur

Address : Dirección : Adresse

City : Ciudad : Ville | *State : Estado : Province* | *Zip Code : Código Postal : Code Postal*

E-Mail Address : Dirección De Correo Electrónico : Courrier Électronique

Phone Number : Número De Teléfono : Téléphone | *Date of Purchase : Fecha de la Compra : Date de l'achat*

Where Purchased : Nombre del Almacén donde fue Comprado : Lieu d'achat

Model Number : Numero del Modelo: No. de modéle | *Serial Number : Numero de Serie : No. de série*

Registering your purchase enables us to contact you in the unlikely event of a service update or product recall and verifies your ownership in the event of loss. : El registrar su compra nos permite estar en contacto con usted en caso de cualquier evento como el aviso de tiempo de servicio o la revocación del producto y verificación de propiedad en caso de robo o pérdida. : L'enregistrement de votre achat nous permettra de vous contacter dans le cas improbable de modifications des instructions d'entretien ou de rappel du produit et vérifier que vous êtes le propriétaire en cas de vol ou de perte.

Primary use of tool: ☐ Professional ☐ Homeowner ☐ Rental Equip.
Uso primario de la herramienta: ☐ Profesional ☐ Dueño de casa ☐ Alquiler
Usage principal : ☐ Professionnel ☐ Residential ☐ Location

Do you wish to receive periodic Shindaiwa product information and special offers by e-mail? ☐ Yes ☐ No
¿Desea usted recibir información periódica y ofertas especiales por correo electronico sobre el producto Shindaiwa? ☐ Yes ☐ No
Souhaitez-vous recevoir périodiquement de l'information sur les produits Shindaiwa et les offres spéciales par courrier électronique ? ☐ Oui ☐ Non

Did you visit the Shindaiwa website before purchasing your product?
☐ Yes ☐ No
Visitó usted la pagina web Shindaiwa antes de comprar su producto?
☐ Sí ☐ No
Avez-vous visité le site d'Shindaiwa avant de procurer votre produit?
☐ Oui ☐ Non

What factor(s) most influenced your purchase?
☐ Performance ☐ Price ☐ Dealer
☐ Reliability ☐ Prior Experience ☐ Quality
☐ Friend/Family ☐ Brand ☐ Warranty
¿Qué factor(es) influenció más en su compra?
☐ Funcionamiento ☐ Precio ☐ Distribuidor
☐ Confiabilidad ☐ Experiencia Anterior ☐ Calidad
☐ Amigo/Familia ☐ Marca ☐ Garantía
Quel facteur (facteurs) vous a influencé le plus?
☐ Performance ☐ Prix ☐ Marchand
☐ Fiabilité ☐ Expérience ☐ Qualité
☐ Ami/Famille ☐ Marque ☐ Garantie

1.877.986.7783 **www.shindaiwa-usa.com** **X7571120102 02-2012**

NOTES

NOTES

Servicing Information

Parts/Serial Number

Genuine Shindaiwa Parts and Assemblies for your Shindaiwa products are available only from an Authorized Shindaiwa Dealer. When you do need to buy parts **always** have the Model Number, Type and Serial Number of the unit with you. You can find these numbers on the engine. For future reference, write them in the space provided below.

Model No. _____ SN. _____

Service

Service of this product during the warranty period must be performed by an Authorized Shindaiwa Service Dealer. For the name and address of the Authorized Shindaiwa Service Dealer nearest you, ask your retailer or call: 1-877-986-7783**.** Dealer information is also available on WWW.SHINDAIWA.COM. When presenting your unit for Warranty service/repairs, proof of purchase is required.

Consumer Product Support

If you require assistance or have questions concerning the application, operation or maintenance of this product you may call the Shindaiwa Consumer Product Support Department at 1-877-986-7783 from 8 am to 5 pm (Central Standard Time) Monday through Friday. Before calling, please know the model and serial number of your unit.

Warranty Registration

To ensure trouble free warranty coverage it is important that you register your SHINDAIWA equipment on-line at www.shindaiwa-usa.com or by filling out the product registration sheet included in this manual. Registering your product confirms your warranty coverage and provides a direct link between you and ECHO if we find it necessary to contact you.

Additional or Replacement Manuals

Replacement Operator and Parts Catalogs are available from your Shindaiwa dealer or at WWW.SHINDAIWA.COM or by contacting the Consumer Product Support Department (1-877-986-7783). Always check WWW.SHINDAIWA.COM for updated information.

shindaiwa®

ECHO Incorporated.
400 Oakwood Road
Lake Zurich, IL 60047-1564 U.S.A.
Telephone: 1-877-986-7783
Fax: 1-847-540-8416
www.shindaiwa.com

Yamabiko Corporation
7-2 Suehirocho 1-Chome, Ohme,
Tokyo, 198-8760, Japan
Phone: 81-428-32-6118
Fax: 81-428-32-6145

Copyright© 2015 By Echo, Incorporated
All Rights Reserved.

T12411001001/T12411999999
T12312001001/T12312999999